University of Glasgow

James Watt School of Engineering

Degrees of MEng, BEng, MSc and BSc in Engineering

ENG4118 ROBOTICS 4

Wednesday, 01 May 2024, 09:30 – 11:30

Attempt ANY TWO questions from Section A and ANY TWO questions from Section B

TOTAL MARKS AVAILABLE
60

The numbers in square brackets in the right-hand margin indicate the marks allotted to the part of the question against which the mark is shown. These marks are for guidance only.

An electronic calculator may be used provided that it does not have a facility for either textual storage or display, or for graphical display.

PLEASE SEE BELOW FOR INSTRUCTIONS ON HOW TO ANSWER:
• Script books will NOT be used in this exam.
• You will be issued with four A3 double sided answer sheets.
• Answer only one question on each A3 answer sheet.
• Ensure you CLEARLY add your GUID and date of birth on each answer sheet. GUID goes on front and back.
• Continuation answer sheets (pink) are available on request. Please ensure you CLEARLY add your GUID, date of birth and question number to all continuation sheets. GUID goes on front and back.

OVER

SECTION A: [30 Marks]
Attempt ANY TWO questions from this section

Q1 (a) Define *resolution*, *span*, and *drift* with respect to sensors. Provide an example for each. [6]

(b) Define *Static Calibration* and provide a short description of the process to follow. [3]

(c) You have been asked to develop a sensing system for distance to be used on a mobile robot that is to operate within an environment that contains moving and static objects (made of varying materials) with priority given to people. There is a requirement that the mobile robot must stop if any object is within a few cm's or touches the system, and that the system must detect objects up to 5m's away. What sensors would you select, providing a justification for the sensors being used? [4]

(d) Calculate the resolution of an absolute encoder that contains 12 tracks. [2]

Q2 (a) A rotational joint for a new robotic leg is being designed. This joint is to rotate in a controlled manner and be able to hold the joint in place. Recommend an actuator for this joint and detail why you have selected the actuator. [3]

(b) Pulse Width Modulation is a popular choice for driving motor control circuits. Explain, using an appropriate diagram, how pulse width modulation works. [5]

(c) Explain what an H-Bridge is and provide a description, with appropriate diagram, of how an H-Bridge works. [7]

Q3 (a) Define the term *Image Analysis*. [2]

(b) With regards to digital images, provide a definition for quantisation and how quantisation impacts an image. [2]

(c) (i) Provide a brief description of the *Hough Transform* [4]

(ii) What preprocessing step is required before the *Hough Transform* is used and why? [2]

(d) (i) Apply the smoothing filter (normalising factor of 9) shown in Figure Q3a to the highlighted pixel shown in Figure Q3b [3]

(ii) What are the drawbacks of using a smoothing filter? [2]

Continued overleaf

1	1	1
1	1	1
1	1	1

Figure Q3a

35	36	32	34	30
32	31	30	35	30
30	29	***45***	37	33
27	28	29	40	32
31	30	32	28	29

Figure Q3b

Continued overleaf

SECTION B: [30 Marks]
Attempt ANY TWO questions from this section

Q4. A cylindrical robot manipulator is employed as part of an industrial process. This process requires the manipulator to follow a trajectory that positions the end-effector at the start and final coordinates shown in Table Q4a:

Coordinate	Start Position	Final Position
Px	2.403m	1.231m
Py	-0.689m	1.576m
Pz	1.750m	1.971m

Table Q4a

(a) Calculate all viable joint variable solutions for the cylindrical manipulator at each of the three positions described in Table Q4a above. [7]

(b) The cylindrical manipulator's joints are controlled by different controllers. Table Q4b shows the different joint controller types and their associated design parameters.

Joint Type	Controller Type	Controller Design Parameters
Prismatic	Proportional & Integral	Critical gain, K_c = 12.56 Critical Period, T_c =0.69s
Revolute	Proportional & Integral	Slope = 15.51°/s Lag = 0.34s

Table Q4b

Calculate the gains for each of the joint controllers using these parameters and an appropriate *Ziegler-Nichols* tuning method. [2]

(c) Hence or otherwise, derive the controller equations for each of the joint controllers presented in Table Q4b. [3]

(d) Describe how these controllers can be used to control position within a *Joint Space Control* scheme. Illustrate your answer with an appropriate diagram. [3]

Continued overleaf

Q5. Figure Q5 depicts a robot manipulator that is used for milling. It is connected to the floor and consists of 1 prismatic joint (J3) and 4 revolute joints (J1, J2, J4 & J5). The end-effector milling tool is connected to joint J5. Link L2 is connected at one end to Joint J2 and to a freely moving hinge at the other end. Link L3 is connected at both ends by freely moving hinges. These connections are configured so that they make Link L4 move vertically, parallel to Link L1.

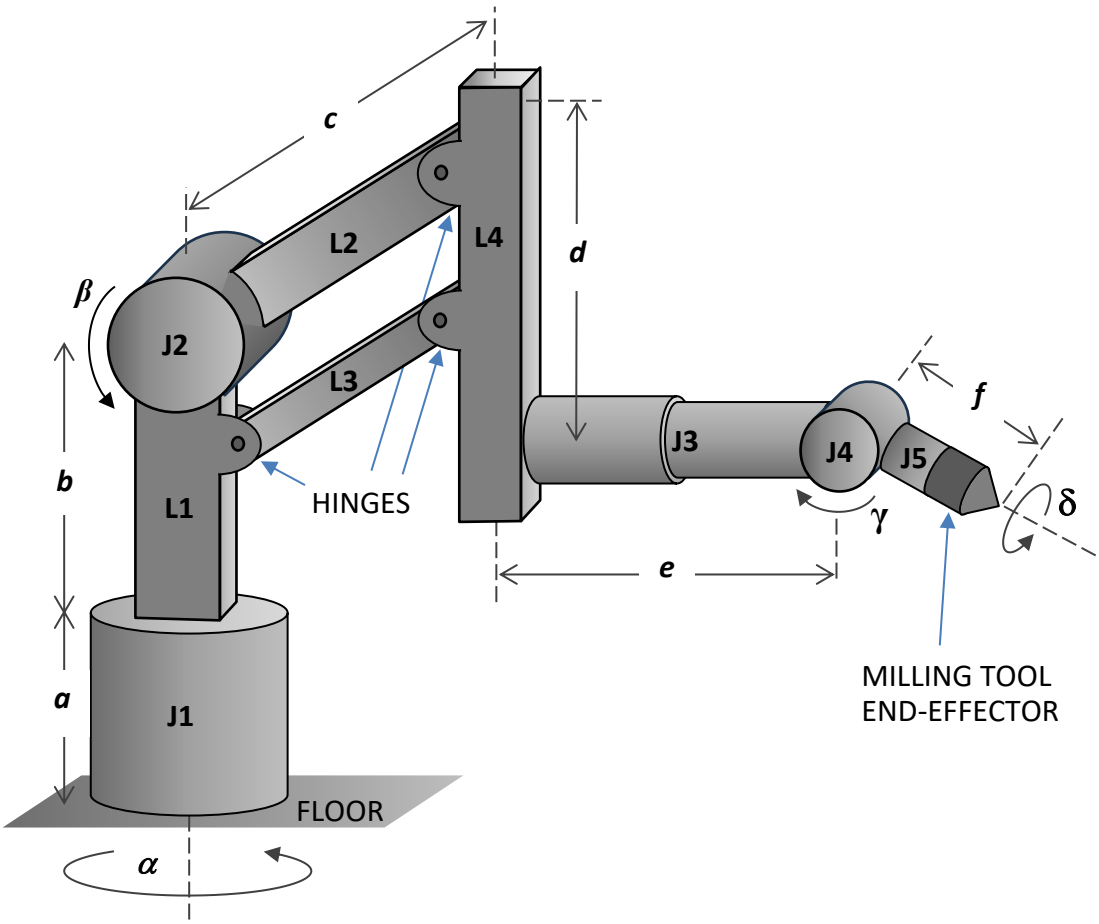

Figure Q5

(a) By considering the *Denavit-Hartenberg Representation*, define the direction of the x-z axes for the manipulator shown in Figure Q5. Illustrate your answer with an appropriate diagram. [3]

(b) Hence or otherwise, construct the *Denavit-Hartenberg Table* associated with the x-z axes defined in part (a). [3]

(c) Using the *Denavit-Hartenberg Transformation Matrix* and the table constructed in part (b), derive the kinematic transformation matrix ${}^{U}T_{H}$ for the manipulator end-effector tool shown in Figure Q5. [9]

Continued overleaf

Q6. The *Denavit-Hartenberg* transformation matrices below describe the successive joints from 1 to 6 for a particular robot manipulator with end-effector.

$$A_1 = \begin{bmatrix} 0.9455 & 0 & 0.3256 & 0 \\ 0.3256 & 0 & -0.9455 & 0 \\ 0 & 1 & 0 & 0.5200 \\ 0 & 0 & 0 & 1 \end{bmatrix},$$

$$A_2 = \begin{bmatrix} 0.3256 & -0.9455 & 0 & 0.0749 \\ 0.9455 & 0.3256 & 0 & 0.2175 \\ 0 & 0 & 1 & 0 \\ 0 & 0 & 0 & 1 \end{bmatrix},$$

$$A_3 = \begin{bmatrix} 0.9397 & 0 & -0.3420 & 0.3759 \\ 0.3420 & 0 & 0.9397 & 0.1368 \\ 0 & -1 & 0 & 0 \\ 0 & 0 & 0 & 1 \end{bmatrix},$$

$$A_4 = \begin{bmatrix} 1 & 0 & 0 & 0 \\ 0 & 1 & 0 & 0 \\ 0 & 0 & 1 & 0.4500 \\ 0 & 0 & 0 & 1 \end{bmatrix},$$

$$A_5 = \begin{bmatrix} -1 & 0 & 0 & 0 \\ 0 & -1 & 0 & 0 \\ 0 & 0 & -1 & 0.7500 \\ 0 & 0 & 0 & 1 \end{bmatrix},$$

$$A_6 = \begin{bmatrix} -0.1219 & -0.9925 & 0 & 0 \\ 0.9925 & -0.1219 & 0 & 0 \\ 0 & 0 & 1 & 0.1000 \\ 0 & 0 & 0 & 1 \end{bmatrix}$$

Here joints 1, 2, 3, 5 and 6 are revolute and joint 4 is prismatic. The transformation matrices describe the joint position and orientation for a position control operation.

(a) Derive the T6 Jacobian for the robot manipulator's end-effector defined by the transformation matrices given above. [13]

(b) Hence or otherwise, calculate the resulting differential motion of the end-effector from the following differential motions of the joints:

$$D\theta = [-1.8, 2.7, -1.8, 2.7, -1.8, 2.7]^T$$ [2]

End of question paper